THK
The Mark of Linear Motion

Caged Ball™

NEW

Advantages of Caged Ball™ Technology

Low noise
Long-term, maintenance free operation
Low torque fluctuation
DN value 160,000

SBK

THK CO., LTD.
TOKYO. JAPAN

CATALOG No.297E

High speed ball screw with caged ball technology

SBK

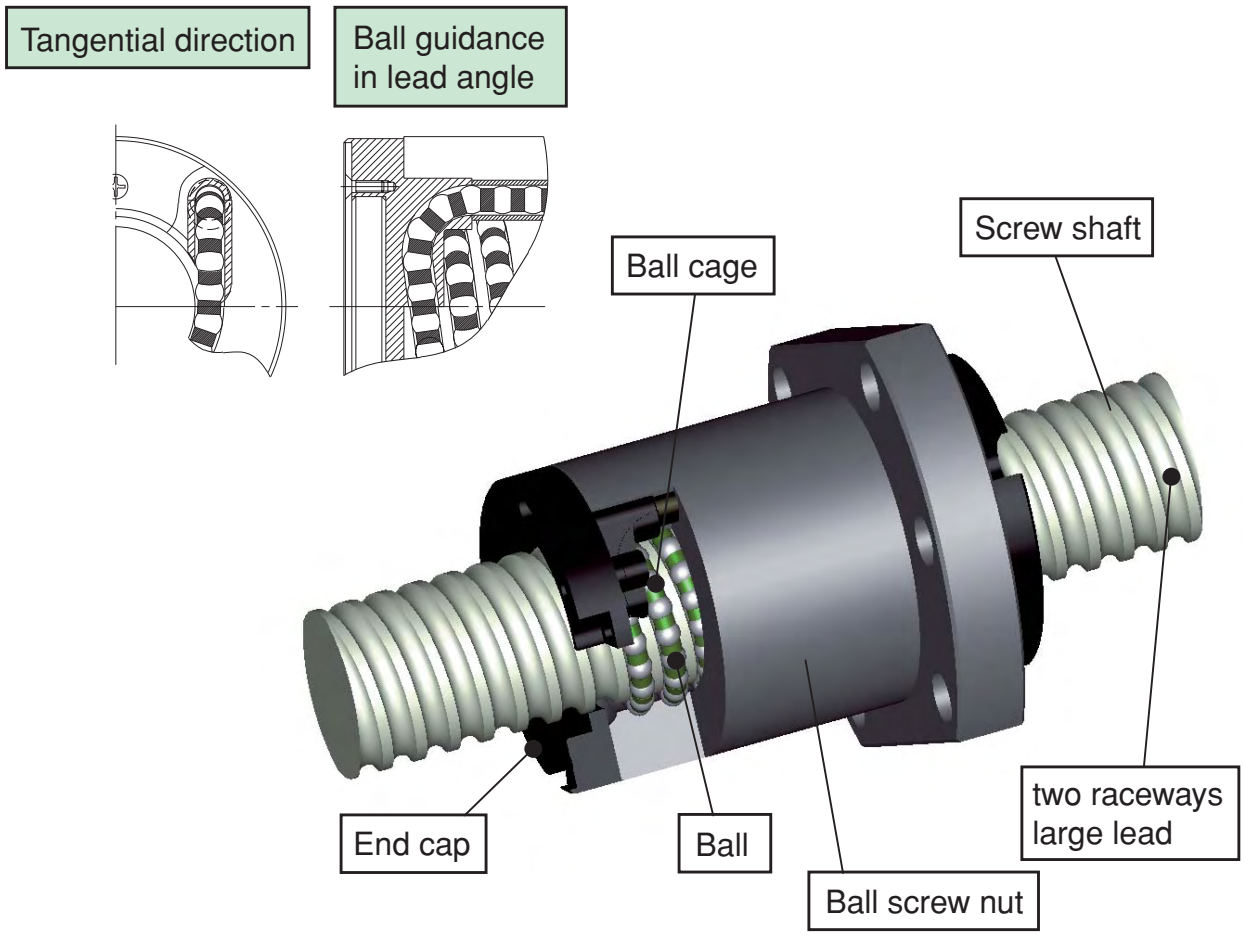

Structure

A high-speed ball screw SBK is provided with caged ball technology in order to eliminate collisions and friction between balls and improve lubrication longevity. By doing this, low noise, excellent torque characteristics and long periods without maintenance have been achieved.

The end cap ball circulation method of the ball screw SBK picks up the balls directly in the tangential direction. This ideal circulation method realizes DN value of 160,000.

(*: DN value = ball center-to-center diameter (mm) × number of rotations per minute)

High-Speed DN value 160,000

Since SBK's circulating mechanism (end cap) is capable of picking up balls in the tangential direction, it allows natural ball motion and makes itself an ideal circulation method. The design, with enough strength in the end cap and ball cage, makes the use with DN value 160,000 possible.

Smooth motion

The use of ball cage eliminates ball-to-ball friction, and allows the balls to be evenly spaced and circulate, reducing the fluctuation in dynamic torque, thus to achieve smooth motion.

Long-term maintenance-free operation

The use of ball cage allows grease pockets to be maintained throughout the whole circulating area and a lubricant to be retained, achieving long-term maintenance-free operation.

Low noise and an acceptable running sound

The use of ball cage eliminates collision noise. The circulating mechanism, capable of picking up balls in the tangential direction, also contributes to eliminating collision noise. Thus, SBK runs with an acceptable sound and low noise emission.

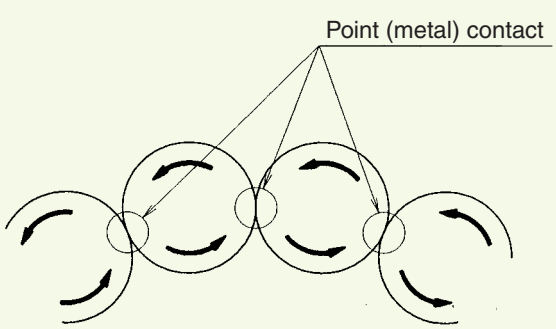

Conventional construction

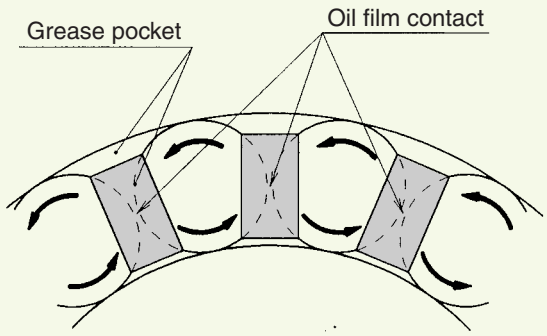

Caged ball technology

■ Durability at high speed

The end cap ball circulation method of the ballscrew SBK picks up the balls directly in the tangential direction. This method realize an ideal circulation.

Test condition

Model Number	SBK4030-7.6
Rotation speed	3800(min^{-1}) (DN value:160,000)
Stroke	700mm
Load	2.3kN
Acceleration	1G

Test result

No problems after 3000km travel and still running

■ Smooth motion

The caged ball technology featured in SBK actualize very low torque fluctuation.

SBK4030-7.6

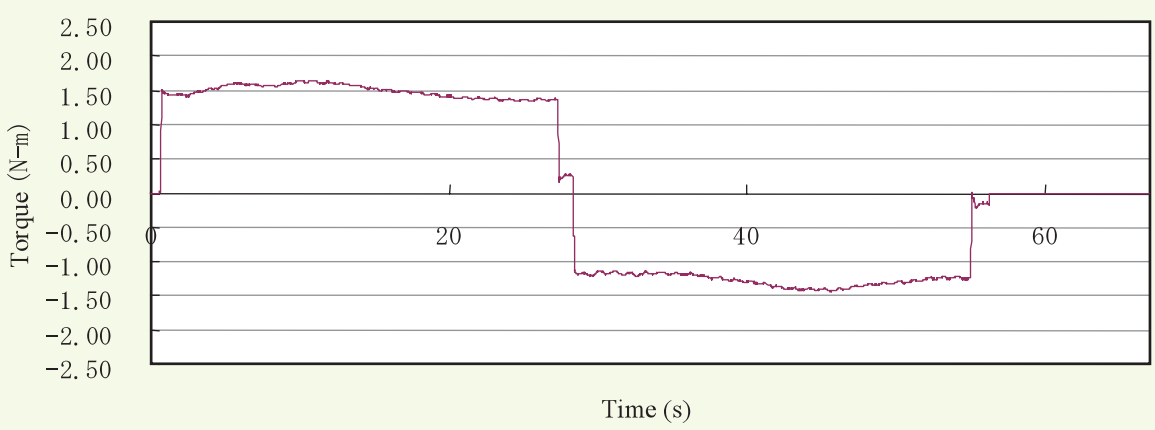

■ Noise level data

SBK makes lower acoustic noise than conventional types by 5db(A).

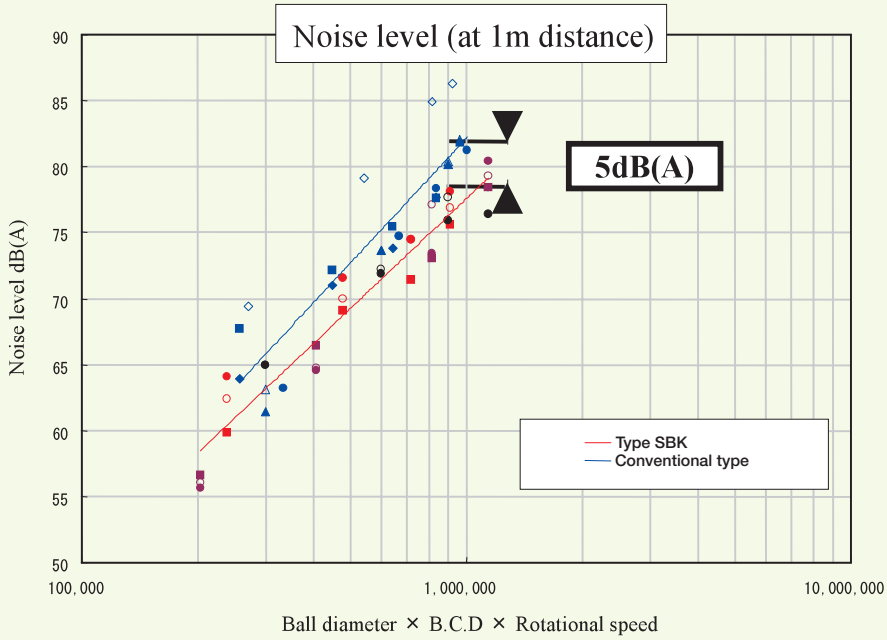

■ Option

Lubricator QZ

Normally, a small amount of oil is lost from a ballscrew during long-term operation. By adding the Lubricator QZ, oil is automatically applied and greatly lengthening maintenance-free operation is realized.

Wiper Ring

The Wiper Ring adopts a specialized resin with friction resistant properties that forms an elastic contact onto the outer shaft and screw grooves, thus preventing foreign matter from entering into the inside of ballscrew nut. Incorporating the Lubricator QZ makes long-term maintenance —free operation a reality, even under harsh environments.

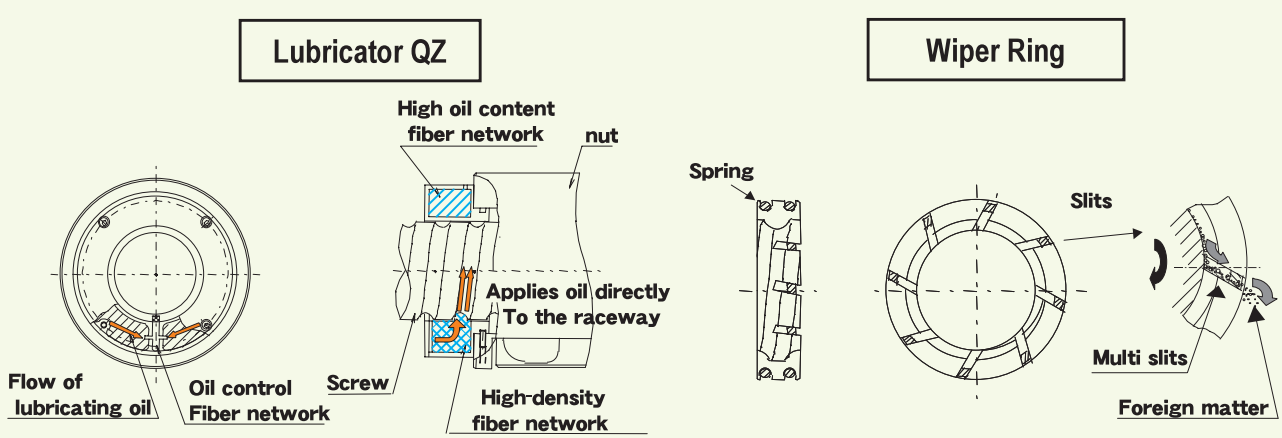

Type SBK

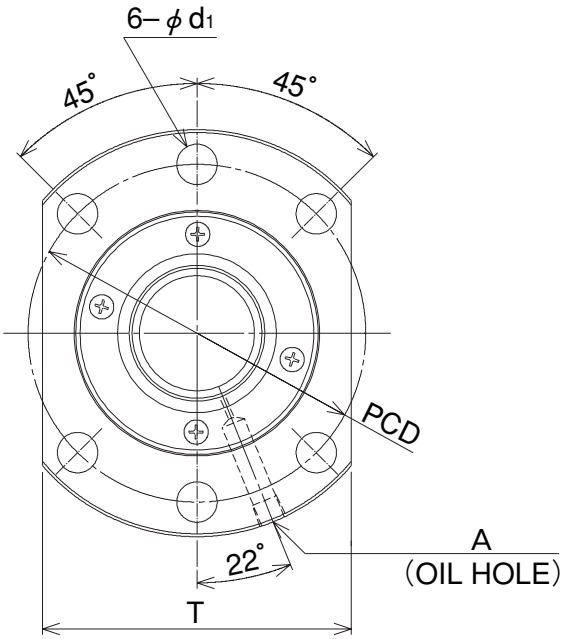

Model number	Screw shaft outer diameter d	Lead ℓ	Load circuit number Row_winding	Ball center diameter dp	Screw shaft root diameter dc	Basic rated load Ca kN	Basic rated load Coa kN
SBK3620-7.6	36	20	2×3.8	37.75	30.4	48.5	85.0
SBK4020-7.6	40	20	2×3.8	42.0	34.1	59.7	112.7
SBK4030-7.6	40	30	2×3.8	42.0	34.1	59.2	107.5
SBK5030-7.6	50	30	2×3.8	52.0	44.1	66.5	135.0
SBK5036-7.6	50	36	2×3.8	52.0	44.1	65.9	135.0
SBK5530-7.6	55	30	2×3.8	57.0	49.1	69.2	147.0
SBK5536-7.6	55	36	2×3.8	57.0	49.1	69.1	148.7

Model Number Coding

SBK3620-7.6 QZ RR G0 + 1500L C5
① ② ③ ④ ⑤ ⑥

① Model number ② Lubricator QZ (no symbol used when there is no lubricator QZ)
③ Seal symbol (RR: labyrinth seal/WW: wiper ring) ④ Axial direction clearance symbol
⑤ Overall screw shaft length ⑥ Accuracy symbol

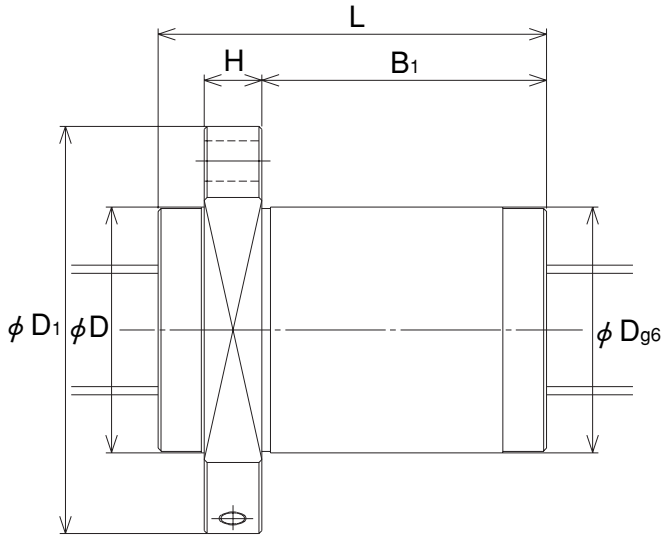

Nut dimension									Maximum permissible rotation speed min^{-1}
Outer diameter D_{g6}	Flange diameter D_1	Length L	H	B_1	PCD	d_1	T	Oil hole A	
73	114	110	18	81	93	11	86	PT1/8	4230
80	136	110	20	79	112	14	103	PT1/8	3800
80	136	148	20	117	112	14	103	PT1/8	3800
90	146	149	22	116	122	14	110	PT1/8	3070
90	146	172	22	139	122	14	110	PT1/8	3070
96	152	149	22	116	128	14	114	PT1/8	2800
96	152	172	22	139	128	14	114	PT1/8	2800

THK High speed ball screw with ball cage

SBK

⚠ Precautions During Use

*** Handling**

* Since the ball screw is a precision component, dropping or subjecting it to strong impacts can result in damage or changes in function. In addition, since the balls and ball cage will come out if the ball screw nut is disengaged from the screw shaft (ball screw section), please handle with care.

*** Assembly**

* If components are forcibly driven onto the screw shaft or nut, indentations may be formed in the rolling surface. Adequate caution is therefore required so as not to allow excessive force to be applied to the screw shaft and ball screw nut during part assembly.
* If the screw shaft support and nut section are off-center or shifted out of position, the service life of the product may be shortened considerably. Adequate caution is therefore required with respect to assembled part accuracy and assembly accuracy.

*** Coolant**

* When this product is used in an environment in which there is the risk of coolant or other similar substance entering the nut section, please consult with THK since product function may be impaired depending on the type of coolant.

*** Operating Temperature Range**

* Since the SBN type uses a special resin, avoid using at temperatures above 80°C.

*** Lubrication**

* Although the ball screw can be used as is since it contains grease (with the exception of special cases), please replenish the grease prior to shipment following trial operation at your firm.
* In the case of using in special environments, such as using in locations constantly subjected to the effects of vibrations, or using in a clean room, vacuum or under extremely low or high temperatures, ordinary grease may not be able to be used. In such cases, please inquire to THK .

T H K CO., LTD.

HEAD OFFICE 3-11-6, NISHI-GOTANDA, SHINAGAWA-KU, TOKYO 141-8503 JAPAN
INTERNATIONAL SALES DEPARTMENT PHONE:(03)5434-0351 FAX:(03)5434-0353

U. S. A.
CHICAGO
PHONE:(847)310-1111 FAX:(847)310-1182
NEW JERSEY
PHONE:(201)529-1950 FAX:(201)529-1962
LOS ANGELES
PHONE:(714)891-6752 FAX:(714)894-9315
SAN FRANCISCO
PHONE:(925)455-8948 FAX:(925)455-8965
ATLANTA
PHONE:(770)840-7990 FAX:(770)840-7897
DETROIT
PHONE:(248)858-9330 FAX:(248)858-9455
BOSTON
PHONE:(781)575-1151 FAX:(781)575-9295
INDIANAPOLIS
PHONE:(317)243-3496 FAX:(317)243-3499
MINNEAPOLIS
PHONE:(612)953-4442 FAX:(612)953-4441
CANADA (TORONTO)
PHONE:(905)712-2922 FAX:(905)712-2925
BRASIL (SÃO PAULO)
PHONE:(011)3924-0911 FAX:(011)3924-0900

GERMANY
DÜSSELDORF
PHONE:(02102)74250 FAX:(02102)7425299
STUTTGART
PHONE:(07150)9199-0 FAX:(07150)9199-888
U.K. (MILTON KEYNES)
PHONE:(01908)222159 FAX:(01908)222161
FRANCE (LYON)
PHONE:(0437)49.14.00 FAX:(0437)49.14.01
ITALY (MILAN)
PHONE:(039)2842079 FAX:(039)2842527
ITALY (BOLOGNA)
PHONE:(3951)6112211 FAX:(3951)6412230
SWEDEN (STOCKHOLM)
PHONE:(08)4457630 FAX:(08)4457639
AUSTRIA (LINZ)
PHONE:(07229)51400 FAX:(07229)51400-79
SPAIN (BARCELONA)
PHONE:(093)652-5740 FAX:(093)652-5746

TAIWAN
TAIPEI
PHONE:(02)2585-8554 FAX:(02)2585-8495
TAICHUNG
PHONE:(04)2359-1505 FAX:(04)2359-1506
CHINA
BEIJING
PHONE:(10)6590-3557 FAX:(10)6590-3557
HONG KONG
PHONE:23761091, 23761252 FAX:23760749
SHANGHAI
PHONE:(21)6267-6571, (21)6267-6851
FAX:(21)6267-6654
MALAYSIA (KUALA LUMPUR)
PHONE:(03)987-1137 FAX:(03)987-8071
INDIA (BANGALORE)
PHONE:(080)330-1524 FAX:(080)330-1524
KOREA (SEOUL)
PHONE:(02)3463-0351 FAX:(02)3017-0351

PRINTED WITH SOY INK

20020805 Printed in Japan